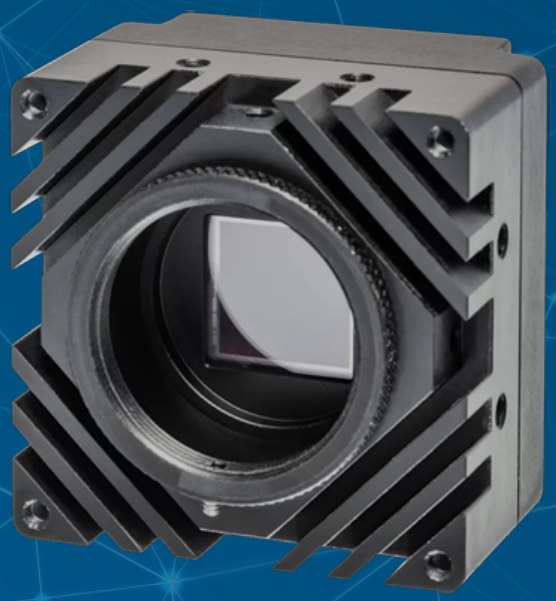

Datasheet

Iron487 CoaXPress

Iron487 CoaXPress

8.1 Megapixel, Global shutter, Small, Rugged, Low Power with Large Feature Set

KAYA Vision is a global leader in commercial, industrial and rugged cameras and imaging system solutions, providing high-performance products for over 15 years. Founded in 2010 by industry experts, KAYA Vision designs, manufactures and supports both COTS and custom products for high-performance imaging needs.

KAYA Vision cameras leverage cutting-edge technology to provide exceptional image quality in the smallest form factors. Our advanced camera lineup features built-in image pre-processing, enhancement, and correction, all while maintaining industry-leading power efficiency. Designed for reliability, our SWaP-C (Size, Weight, Power, and Cost) optimized cameras offer the highest durability, operating in extreme environments with the widest temperature ranges, superior shock and vibration resistance, and extended MTBF. KAYA Vision cameras are the ultimate choice for high-performance imaging systems across commercial, industrial, medical, defense aerospace, and scientific applications.

Key Features:

- 8.1 Megapixel up to 150.0 fps
- Monochrome Taped Coverglass sensor variation
- Up to 4.5 W power at full rate
- Full image processing feature set
- CoaXPress v2.1 standard compliant
- Gen<i>Cam compliant
- 1 CoaXPress link
- C lens mount available
- Commercial and Industrial grade options
- Full EMVA1288 report
- Full built-in self-test (BIT)
- Full built-in voltage testing
- Customization as per user requirements

Applications:

- Silicon wafer inspection
- Agriculture
- Material Inspection
- Medical

TECHNICAL DATA

General	
Pixel Size	2.74 µm x 2.74 µm
Resolution	2840 (H) x 2840 (V)
Sensor Size	11.0 mm diagonal
Sensor Format	2/3
Sensor	Sony IMX487
Sensor Type	CMOS
Output Interface	CoaXPress v2.1
Supported Interface rates	CXP-12, CXP-6 or CXP-3
Interface Connector	Micro-BNC
Number of Connectors	1
Output Resolution	8, 10 or 12 bit
Maximum Frame Rate	• 150 fps @8 bit resolution • 120 fps @10 bit resolution • 100 fps @12 bit resolution
Tap Geometry	1X-1Y
Image Acquisition	Continuous / Triggered
Camera Control	Gen<i>Cam
Electronic Shutter	Global
Monochrome / Color	Monochrome Taped Coverglass
Temporal Noise	<2.5 e- at 25℃
Full Well Charge	9660 e-
Dynamic Range	>69.85 dB at 320 nm
Signal-to-Noise Ratio (SNR max)	39.85 dB at 320 nm
Quantum Efficiency (QE)	>48.5% at 320 nm
Shortest Exposure	10 µs
IR Filter (optional)	-
Exposure control	Automatic/Manual
Gain control	Automatic/Manual
Color Control	• RGB offsets • Auto / Manual White balance • LUT
Image enhancement	• Defect pixel correction • Gain (Analog / Digital) • Auto / Manual black level • Binning • Auto Exposure / Gain • Flat field / Fixed pattern noise correction

Additional on camera processing	• ROI • Image flip • Frame counter • Operational Time Counter • Binning
Power Input	• PoCXP • External 11 V - 28 V input
Power Consumption	<4.5 W at 24 V DC
Configuration software	Gen<i>Cam Standard software
Synchronization	Protocol/External I/O Trigger
Exposure Strobe output	Yes

General Purpose Inputs and Outputs	
I/O lines	• 1 opto-isolated input • 1 opto-isolated output • 1 singled-ended TTL output • 1 singled-ended TTL/LVTTL input
Usage	• Any System I/O input lines can be connected to any I/O output line • Any I/O input line can generate any trigger event • Any I/O input line can trigger a timer • Any I/O input line can trigger a counter
Electrical specifications	• TTL lines: 5 V TTL compliant • LVTTL lines: 3.3 V LVTTL compliant • Isolated lines: opto-isolated lines with voltage range up to 30 V
Absolute Maximum	• TTL/LVTTL input voltage: -0.3 V to +6 V • TTL output current: 40 mA • Isolated input voltage: -4 V to +25 V • Isolated output voltage: -0.3 V to +25 V • Isolated input current: 30 mA • Isolated output current: 50 mA
Operating	• TTL/LVTTL input voltage: 0 V to +5 V • TTL output current: 0mA to 24 mA • Isolated input voltage: 0 V to +24 V • Isolated output voltage: 0 V to +24 V • Isolated input current: 6.3 mA to 15 mA • Isolated output current: 1 mA to 25 mA
Timers	• 4 general purpose timers • Configurable delay and duration • 32-bit accumulator
Counters	• 4 general purpose counters • Configurable value and duration • 32-bit counter

Mechanical	
Dimensions (including lens mount)	Commercial : 44 mm x 44 mm x 35.1 mm (1.7” x 1.7” x 1.4”) Industrial : 44 mm x 44 mm x 35.3 mm (1.7” x 1.7” x 1.4”)
Weight (without lens)	Commercial : 50 g (1.8 oz) Industrial : 90 g (3.2 oz)

Lens Mount	C
Sensor Alignment	Active
Ingress Protection	Optional IP67 (with protective lens tube)

Environmental Conditions	
Operating ambient air temperature	Commercial : 0℃ to +50℃ (32℉ to +122℉) Industrial : -40.0℃ to +70℃ (-40℉ to +158℉) At 1 m/s airflow
Operating ambient air humidity	10% to 90% RH non-condensing
Storage ambient air temperature	Commercial : 0℃ to +55℃ (32℉ to +131℉) Industrial : -40.0℃ to +75℃ (-40℉ to +167℉)
Storage ambient air humidity	10% to 90% RH non-condensing
Operational Shock	Tested per MIL-STD-810G Method 516.6, 3-axis Shock 75G
Operational Vibration	Tested per MIL-STD-810G Method 514.6, 3-axis Vibration Category 20
MTBF	2,100,000 hrs @ 50C (Telecordia)

Certifications	
Electromagnetic - EMC standards	• The European EMC Directive 2014/30/EU • The Unites States FCC rule 47 CFR 15
EMC - Emission	• EN 55032:2015 Class B • FCC 47 Part 15 Class B
EMC - Immunity	• EN 55035:2017 Class B • EN 61000-4-3 • EN 61000-4-4 • EN 61000-4-6
Flammability	PCB compliant with UL 94 V-0
RoHS	Compliant with the European Union Directive 2011/65/EU (RoHS2)
REACH	Compliant with the European Union Regulation No 1907/2006
WEEE	Must be disposed of separately from normal household waste and must be recycled according to local regulations

Iron487T-SC_

Color options

T – Monochrome Taped Coverglass

Grade

S – Commercial
R – Industrial

Lens mount

C – C-Mount

Custom options

G – Add GPIO
O – Open Frame

Accessories	
Optional accessories	• CoaXPress cables
Accessories Included	-

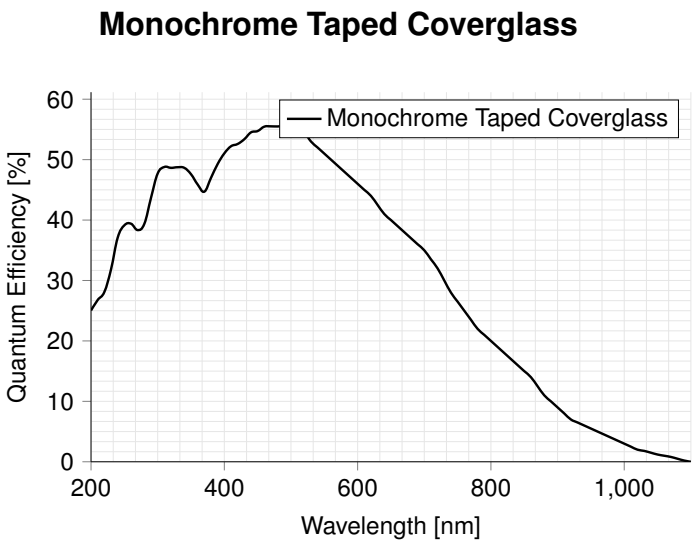
Monochrome Taped Coverglass
Monochrome Taped Coverglass
Quantum Efficiency [%]
60
50
40
30
20
10
0
200
400
600
800
1,000
Wavelength [nm]

GENERAL PURPOSE INPUT OUTPUT

GPIO Pinout – 12 Pin Hirose Connector

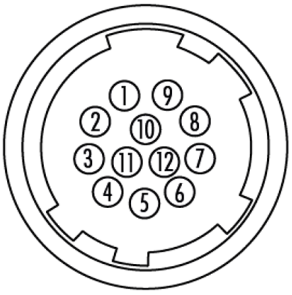

1. DC Power return
2. DC Power
3. RS232 RX
4. RS232 TX
5. OUT2 Return
6. RS232 Return
7. OUT1 (TTL)
8. IN1 (OPTO)
9. IN2 (TTL/LVTTL)
10. IN1 Return
11. IN2/OUT1 Return
12. OUT2 (OPTO)

The GPIO connector used on the camera is a 12-pin male Hirose connector. It is recommended to use a cable with a matching Hirose 12 pin female connector. Hirose's manufacturer's part number is listed below:

Product Name	Product Part Number
Hirose 12P connector, male	HR10A-10R-12PB
Hirose 12P connector, female	HR10A-10P-12S

MECHANICAL DRAWINGS

C-Mount

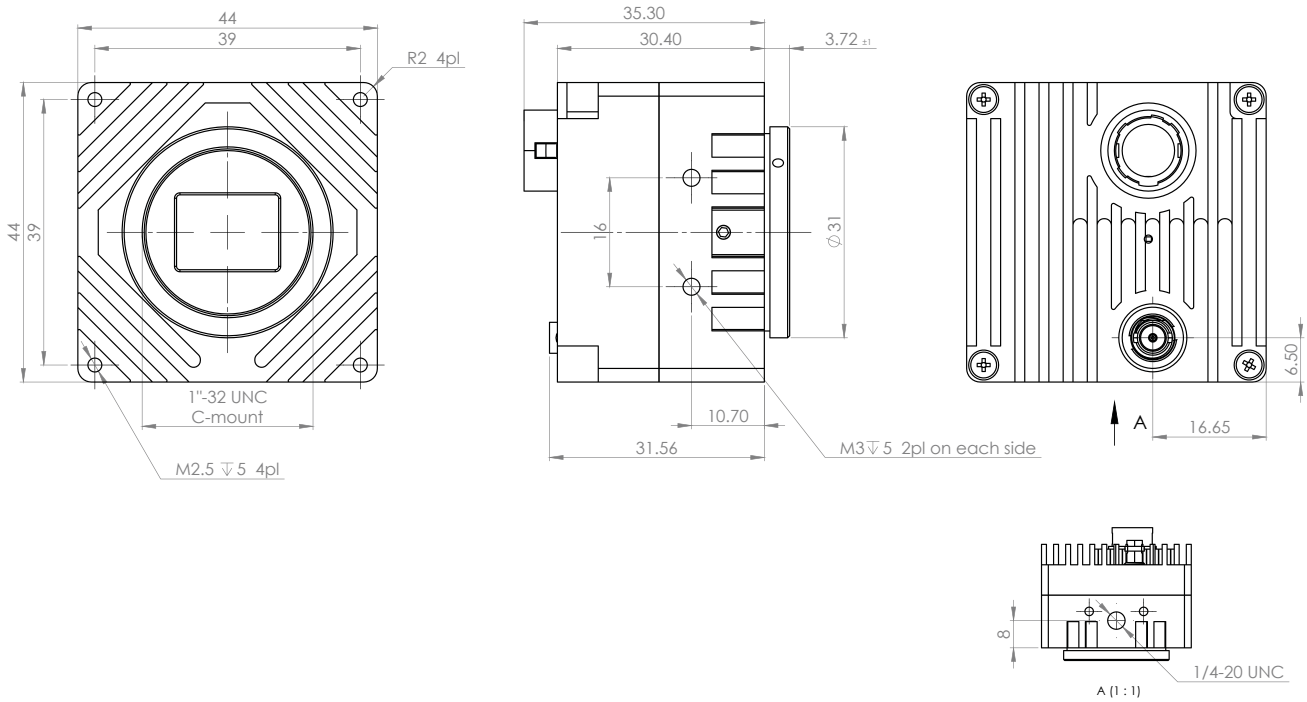

Dimensions are in millimeters.

COMPATIBILITY

KAYA Vision develops and maintains compatibility and interfaces for the most common and advanced vision image processing libraries and applications. We ensure seamless integration with major platforms to provide users with a flexible and convenient development environment, minimize integration effort, and accelerate time to deployment.

Supported vision standards:

CoaxPress GEN<i>CAM CoaxPress over-Fiber SMPTE

Supported vision libraries:

HALCON a product of MVTec OpenCV LabVIEW MATLAB COGNEX NORPIX

Supported operating systems:

Windows LINUX NVIDIA JetPack

Please check our website for an up-to-date list of other supported libraries and software package.

International Distributor

Sky Blue Microsystems GmbH
Geisenhausenerstr. 18
81379 Munich, Germany
+49 89 780 2970, info@skyblue.de
www.skyblue.de

KAYA VISION

Have questions about pricing, availability, documentation, or custom options?
We're always ready to assist and provide expert guidance.
Sales Inquiries: info@skyblue.de
Technical Support: info@skyblue.de
www.skyblue.de

© 2025 KAYA Vision, Inc. All rights reserved. KAYA Vision, the KAYA Vision logo, Iron, Zinc, Mercury and combinations thereof are trademarks of KAYA Vision, Inc. in the United States and/or other jurisdictions. Microsoft Windows® is a registered trademark of Microsoft Corporation. Linux® is a registered trademark of Linus Torvalds in the U.S. and other countries. JetPack® is a trademark of NVIDIA Corporation. HALCON® is a registered trademarks of MVTec Software GmbH. LabVIEW™ is a trademark of National Instruments. Neither KAYA Vision, nor any of its products or services are affiliated with, endorsed by, or sponsored by National Instruments. MATLAB® is a registered trademark of The MathWorks, Inc. Cognex® is a registered trademark of Cognex Corporation. Other names are for informational purposes only and may be trademarks of their respective owners. KAYA Vision is not liable for harm or damage incurred by information contained in this document.